325MHz(7kW) SSR Circulator Test Plan
PIP2IT HPRF Distribution

Document ID(Teamcenter): ED0010717
RF Dept Tech notes ID: 098
Editor:
Ahmed Syed
Staff Engineer

Version: 2
Date updated: August 5, 2019th

Table of Contents

Revision History 3

1.1 Objective 3

1.2 Test equipment 4

1.3 Test setup 1 5

1.4 Test setup 2 6

1.3.1 Pre-test 7

1.3.2 Test 1 8

1.3.3 Test 2 9

1.5 Conclusion 9

Revision History

Version #	Date	Author	Comment
0.0	July 20 2019	Ahmed Syed	Initial Version of the document
1.0	July 30th, 2019	Ahmed Syed	Changes / revisions suggested by Dave Peterson
2.0	August 5, 2019	Ahmed Syed	Changes / revisions suggested by John Reid

1.1 Objective

- To run sanity check on the circulator setup and ensure normal, safe operation before proceeding to actual verification testing.
- To perform high power(7kW), full bandwidth test (322- 328 MHz) and measure isolation, insertion loss and VSWR for specification verification.
    - Isolation: 20 dB minimum
    - Insertion loss: 0.3 dB maximum
    - VSWR: 1.20:1 maximum
    - **Full bandwidth(322- 328 MHz**): Circulator would operate at center frequency (325MHz) during most of its operation, occasionally it might come across short pulses of frequency sweep (~ 322 to 328MHz).
- **Operation modes**:To verrify if the circulator can provide appropriate reverse isolation for continuous full reflection at any phase angle and at full design incident power level.

1.2 Test equipment

SNO	Component	Model/ Serial number	QTY required	QTY available	Comment
1	Circulator	306-101 to 306-109	9	9	Device under test
2	Water cooled load	-	2	2	50ohm, 15kW
3	Splitters	-	3	3	~3.4dB down
3	Directional Coupler	612980 CEMC160-0077 0714404	3	3	Isolation:(REV/FOR average) ~26dB, 34dB,31dB,
4	Power meter	E4417A	5	3	-
5	Power Sensor	E9322A OR E9327A	5	3	1nW to 100mW
6	Flow meter	-	2 to 3	3 to 3	2x Vortex flowmeter wired to PLC. Turbine flow meter to NIM module
7	Network analyzer	E5071C	1		4 port Agilient NA using 20dB attenuators
8	Narda meter	NBM - 520(meter) HF0191 (probe)	1	1	Contact: Matthew Spaw, Rob Bushek
9	Temperature Sensor	-	3		RTD to measure water flow temperature

1.3 Test setup 1

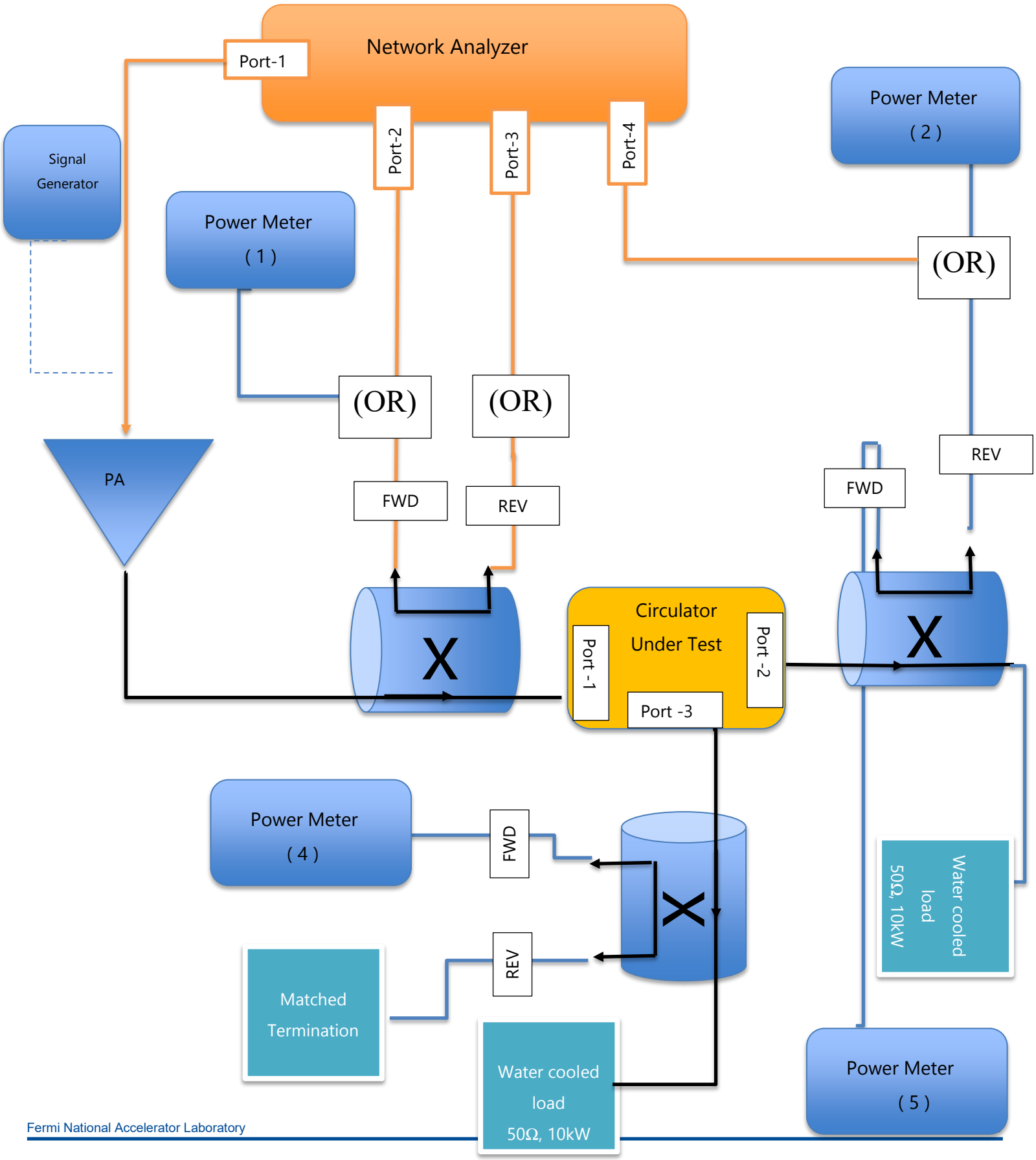

1.4 Test setup 2

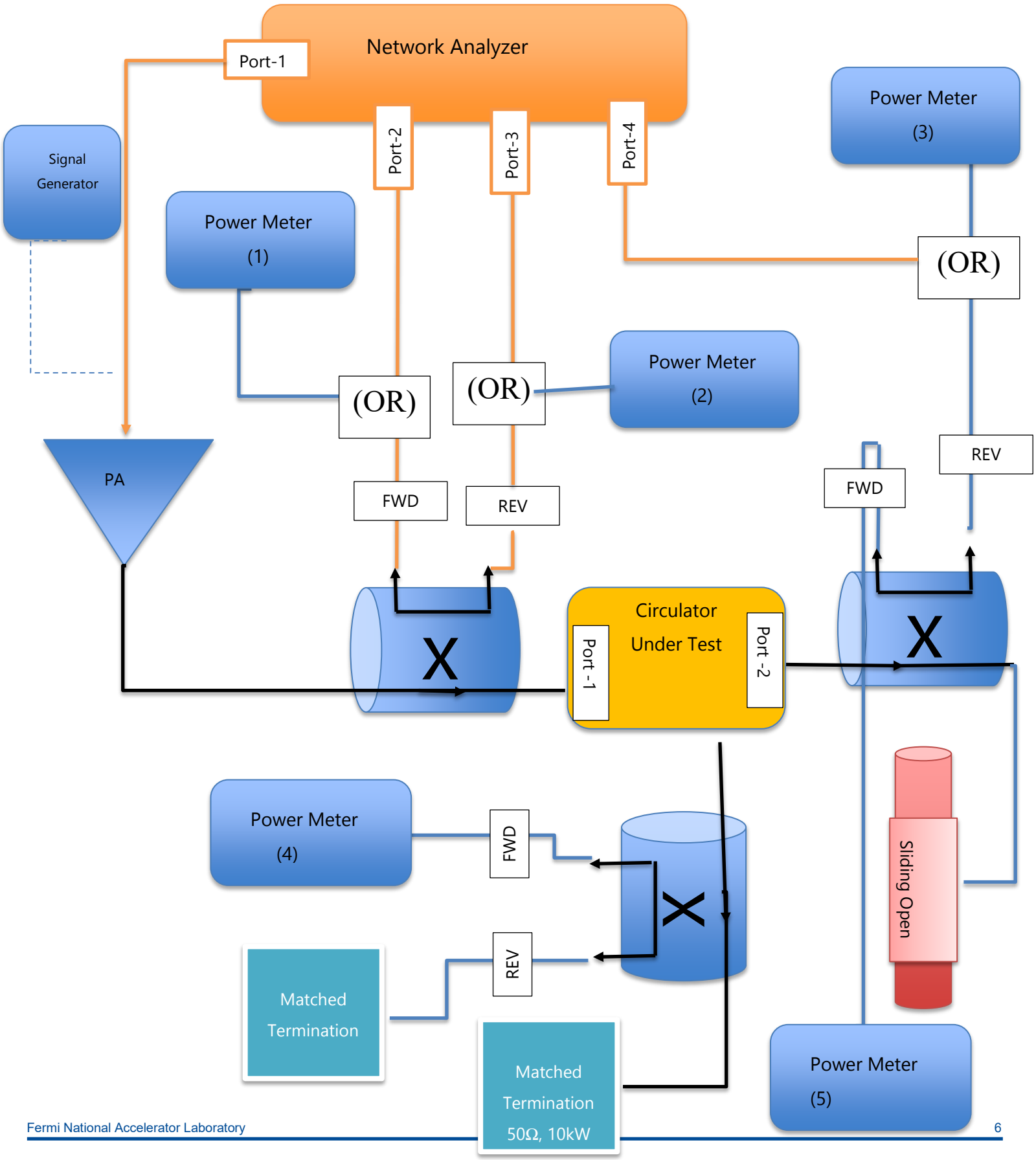

1.3 Procedure

1.3.1 Pre-test

1. **Hazard Analysis:** Review complete HA and attached documents. Proceed to test only upon HA approval.
   HA can be found at this location(https://www-bd.fnal.gov/cgi-msd/admin/haForm.pl?haID=1955&urlDeptID=55**)**
2. **Physical inspection**: Inspect all cables, couplers, RF loads etc. for signs of physical damage. Couplers, splitters and sliding open have been tested and performance verification complete.
3. **Water connections/ interlocks**: MS7 supply to be used as cooling source for circulator and MS6 to be used a cooling source for RF load. Ensure flow is maintained before turning on power and **30minutes after amplifier is turned off** to prevent damage to components due to excess heating.
   Klystron PLC and Klystron PLC EX1 interlock set-up:
   - Minimum required flow rate for circulator 2.5gpm, minimum threshold set at 2.5gpm for permit signal.
   - Minimum required flow for RF load at 7kW power 1.66gpm:
     - Threshold set for parallel load(port-2 and port-3 loads) supply connections:7gpm.
     - Threshold set for port-3 load individual supply connection: 2gpm.
   - Manual verification(using multimeter) of above interlocks to trip below minimum required flow(for individual supply connections) is complete, however verification on connection to amplifier is pending(To be completed as first step once amplifier is turned ON).
4. **325MHz Bruker amplifier limit max output power:** Amplifier power **should not exceed 7kW** under any circumstances. RF synthesizer shall be used to tune the power output and max limit to be set to 7kW.
   Amplifier has internal circulators which are centered at 325MHz and protect internal circuitry from reflected power, this tuning and protection offered from reflected power changes if center frequency is shifted from 325MHz**.** In order to safely perform a **frequency sweep(only at:322 to 328MHz)** on circulator under test always set the amplifier power level lower than 1/6th max power ~0.5 to 1kW
   - **Use attenuators on input of Bruker SSA** to limit output to 7kW max output power with maximum synthesizer output.

5. **RF leak detection/ Interlock set-up**: Narda meter to be used as manual interlock, if RF leak detected above 10.83W/m ^2 (averaged over 6 mins) amplifier should be turned off immediately.
6. **Network analyzer, Power meters**: Ensure appropriate attenuation is allowed for the input signal to the Network Analyzer, DO NOT exceed above the max limit specified on the input terminals.
   Ensure directivity of coupler is set correctly as offset in the power meters to correctly display FWD and REV power.
   Note: If RF leak higher than 10.83W/m^2 , arcing in test components, excess heating or any other safety concern noticed stop the test immediately to address the concern.
7. **Two-man rule:** Would apply for this test.

1.3.2 Test 1

1. Arrange test setup as shown in setup 1, driving RF circulator to port 1.
2. **Frequency sweep/ Low power:**
   a. Set amplifier drive power to 500W, vary frequency manually from 322 to 328 MHz in increments of 1MHz.
   b. Record power meter measurements, network analyzer isolation, insertion loss traces for frequency sweep.
3. **RF leak Detection:** Measure Narda probe power density measurements at several locations around test setup to ensure RF leaks are below occupational limit(**10.83 W/m^2 -**Average over 6 minutes)
4. **High power/ Fixed frequency**:
   a. Repeat step-3 for every power increment.
   b. Fix center frequency of amplifier to 325MHz(**Don't perform frequency sweep at high power levels).**
   c. Vary input power in increments of 500W from 500W to 7kW and at every increment record 5 power meter readings and network analyzer isolation, insertion loss traces for each frequency (325MHz)/ power level.
5. Proceed to Test 2.

1.3.3 Test 2

1. Arrange the test setup as shown in setup 2.
2. **Low to high power/ fixed slide position:**
   a. Vary input power in increments of 500W from 0W to 7kW and set the frequency to 325MHz.
   b. Proceed to Step 3 for every power increment.
3. **RF leak Detection:** Measure Narda probe power density measurements at several locations around test setup to ensure RF leaks are below occupational limit(10.83 W/m^2 -Average over 6 minutes).
4. **Low power/ varying slide position:**
   a. Set input power to 500W frequency to 325MHz vary slide position in Λ/4 steps following markings on the slide(Note: slide is calibrated for 162.5MHz).Complete full cycle from mean position to extreme position and back to mean position.
   b. Proceed to Step 3 for every slide position change.
   c. At every new slide position record 5 power meter readings and network analyzer isolation, insertion loss traces.
   d. Proceed further only if circulator measurements taken in Step 2 and Step 4 fall within specification (isolation, insertion loss etc.)
5. **Full power/ varying slide position:**
   a. Set power level to 7kW at fixed frequency 325MHz.
   b. Vary slide position in steps of Λ/4 following markings on the slide(Note: slide is calibrated for 162.5MHz).Complete full cycle from mean position to extreme position and back to mean position.
   c. At every new slide position record 5 power meter readings and network analyzer isolation, insertion loss traces.
6. End of Test for circulator under test.
7. Perform LOTO on amplifier, disconnect circulator, connect next circulator to be tested. Repeat from Pre-test.

1.5 Conclusion

This document outlines test plan and procedure for 325MHz circulator specification verification.