REV.	DESCRIPTION	DRAWN / APPD.	DATE / DATE
A	ANALYZER INTERCONNECT ADDITIONS	W. MUELLER	5/11/05
B	ADDED 2-4GHz SWITCH SIGNALS ON R:S8RP22 PORTS 2 & 3 (RV4 & RH4-HYB)	W. MUELLER	2/17/06
C			

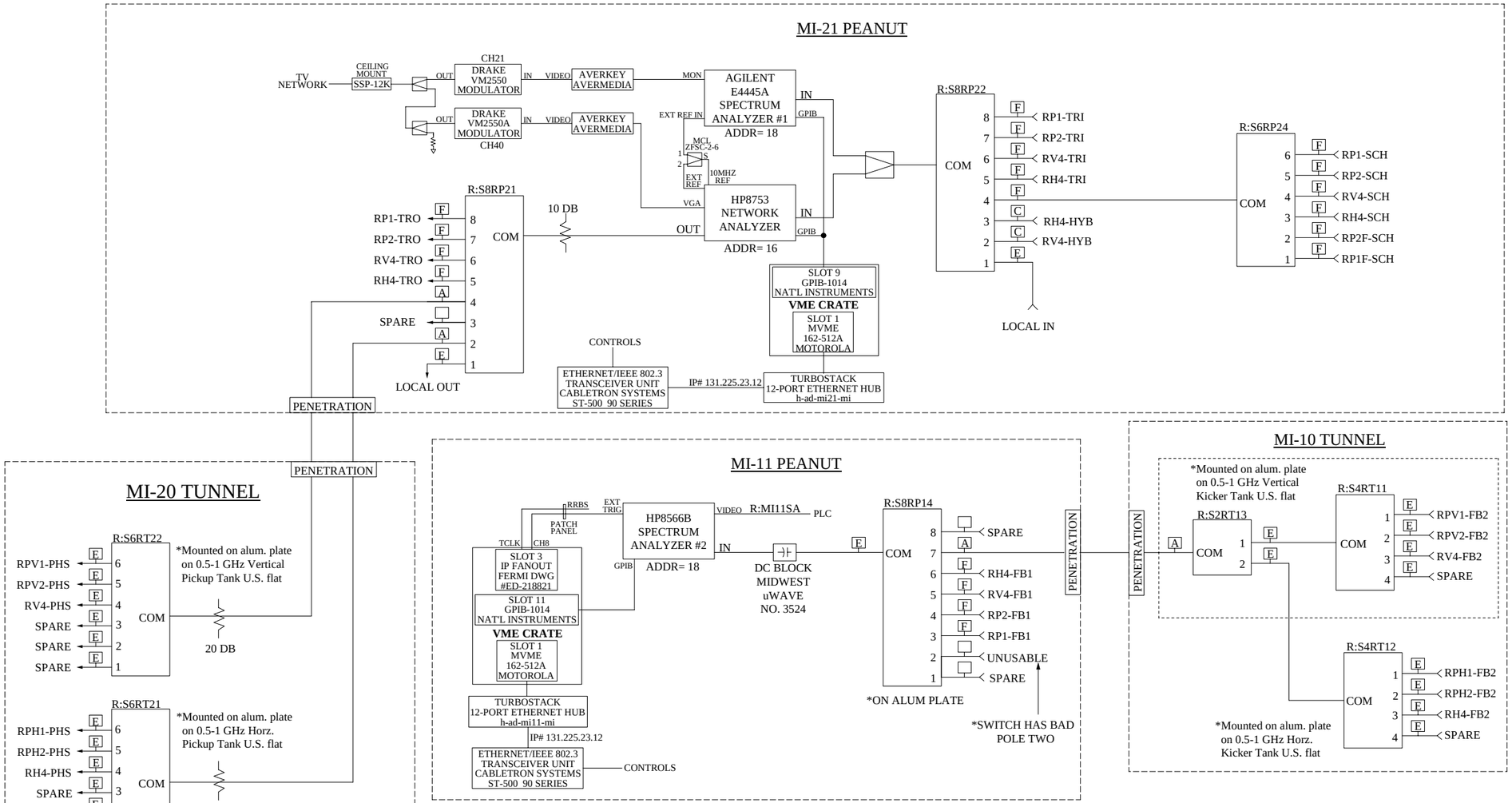

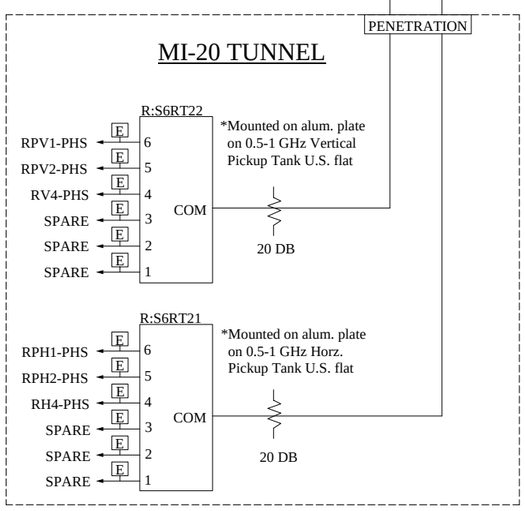

*NOTES:

1) SYSTEM DESIGNATIONS ARE AS FOLLOWS:
   'C' REPRESENTS CORE SYSTEMS
   'D' REPRESENTS DEBUNCHER SYSTEMS
   'S' REPRESENTS STACKTAIL SYSTEMS
   'P' REPRESENTS MOMENTUM SYSTEMS
   'H' REPRESENTS A HORIZONTAL SYSTEM
   'V' REPRESENTS A VERTICAL SYSTEM
   'FB' REPRESENTS FANBACK
   'TRI' REPRESENTS TRANSFER SWITCH IN
   'TRO' REPRESENTS TRANSFER SWITCH OUT
   'SCH' REPRESENTS SCHOTTKY SCAN SIGNAL
   'F' REPRESENTS PASSIVE FILTER
   'PU' REPRESENTS PICKUP TEST INPUT
   'PHS' REPRESENTS PHASING INPUT

2)

3) ALL A CABLES ARE 1/2" FOAM HELIAX
   ALL B CABLES ARE 1/2" SUPERFLEX
   ALL C CABLES ARE SF142B STRIPLEX
   ALL D CABLES ARE 7/8" HELIAX
   ALL E CABLES ARE 1/4" HELIAX
   ALL F CABLES ARE 0.141" FLEXLINE

4) SWITCH TYPE AND IDENTIFICATION: R:S6 RT 2 2

SYSTEM: RECYCLER (R)
ACCUMULATOR (A)
OR DEBUNCHER (D)

OF THROWS:

LOCATION: RT=RECYCLER TUNNEL
RP=RECYCLER PEANUT

WHICH END: 1= 10 SIDE, 2= 20 SIDE

SWITCH # AT THAT LOCATION:

SP2T BY TELEDYNE MICROWAVE, CS32N6E
SP4T BY DYNATECH, #04-113E29-1 OR BY WAVECOM #043-B237-D10-3B1
SP6T BY DYNATECH, #06-113E29-1 OR BY WAVECOM #063-B237-D10-3B1
SP8T BY DYNATECH, #L8-113E29-1

2/17/06

ITEM NO.	PART NO.	DESCRIPTION OR SIZE	QTY. REQ.
PARTS LIST			

UNLESS OTHERWISE SPECIFIED			ORIGINATOR	R. J. PASQUINELLI	
FRACTIONS	DECIMALS	ANGLES	DRAWN	WESLEY MUELLER	5/5/00
+/-	+/-	+/-	CHECKED		
1. BREAK ALL SHARP EDGES 1/64 MAX.			APPROVED		
2. DO NOT SCALE DRAWING			USED ON		
3. DIMENSIONING IN ACCORD WITH ANSI Y14.5 STD'S			MATERIAL-		
√ MAX. ALL MACHINED SURFACES					

FERMI NATIONAL ACCELERATOR LABORATORY
UNITED STATES DEPARTMENT OF ENERGY

RECYCLER NETWORK/SPECTRUM ANALYZER SWITCH TREE

SCALE	FILMED	DRAWING NUMBER	REV.
		8130.00 - ED - 356099	B