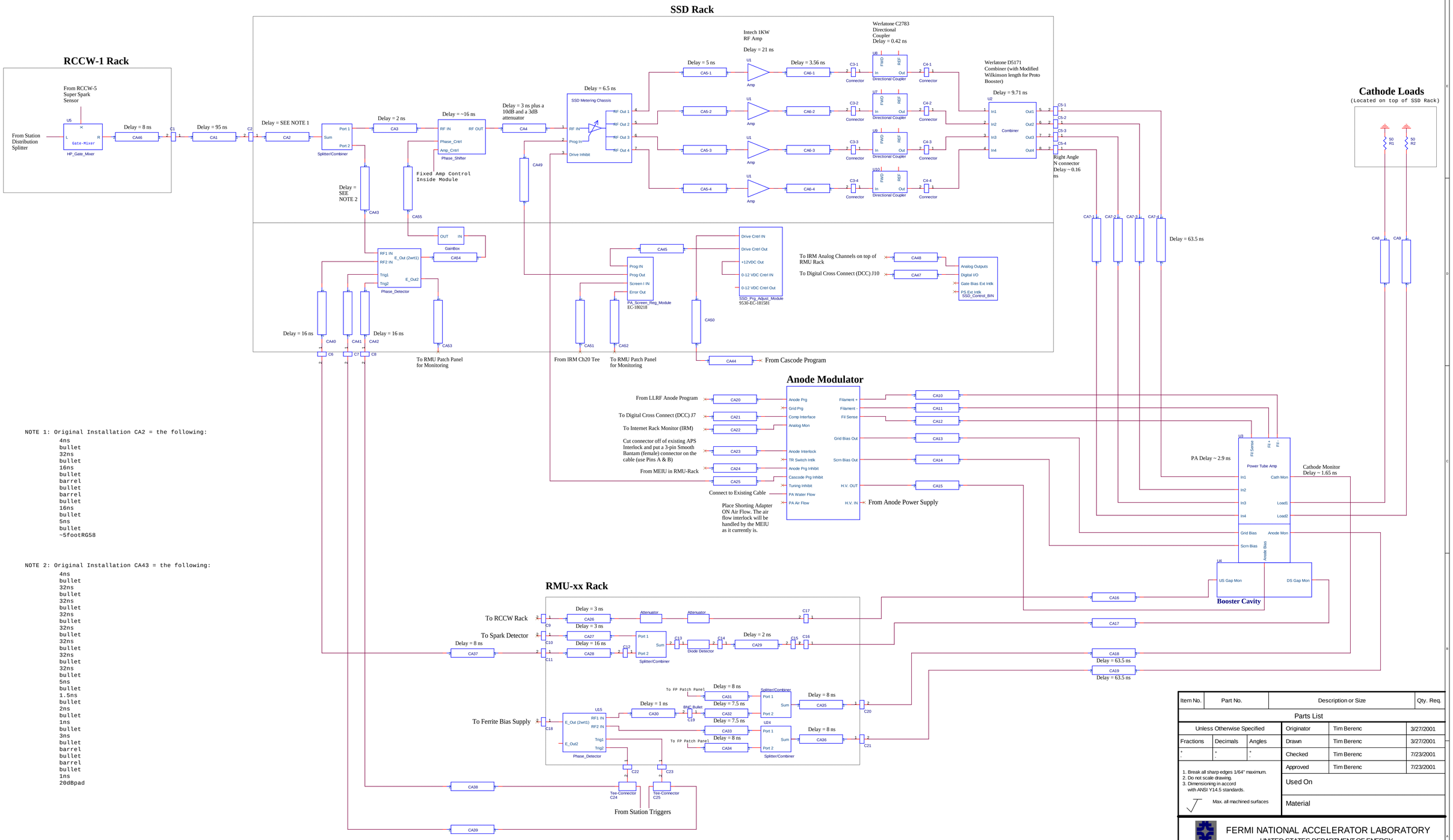

NOTE 1: Original Installation CA2 = the following:

```
4ns
bullet
32ns
bullet
16ns
bullet
barrel
bullet
barrel
bullet
16ns
bullet
5ns
bullet
~5footRG58
```

NOTE 2: Original Installation CA43 = the following:

```
4ns
bullet
32ns
bullet
32ns
bullet
32ns
bullet
32ns
bullet
32ns
bullet
32ns
bullet
5ns
bullet
1.5ns
bullet
2ns
bullet
1ns
bullet
3ns
bullet
barrel
bullet
barrel
bullet
1ns
20dBpad
```

Item No.	Part No.	Description or Size	Qty. Req.
Parts List			

Unless Otherwise Specified			Originator	Tim Berenc	3/27/2001
Fractions	Decimals	Angles	Drawn	Tim Berenc	3/27/2001
+ -	+ -	+ -	Checked	Tim Berenc	7/23/2001
1. Break all sharp edges 1/64" maximum. 2. Do not scale drawing. 3. Dimensioning in accord with ANSI Y14.5 standards.			Approved	Tim Berenc	7/23/2001
Max. all machined surfaces			Used On		
			Material		

FERMI NATIONAL ACCELERATOR LABORATORY
UNITED STATES DEPARTMENT OF ENERGY

Booster HLRF System
Prototype Solid State Drive System
Block Diagram

Scale	Software	Drawing Number	Rev
	OrCAD Capture Version 9	0339.000-ED-181868	1

Date: Monday, July 23, 2001 Sheet 1 of 1