REV	DESCRIPTION	DRAWN / APPD	DATE
.	.	.	.

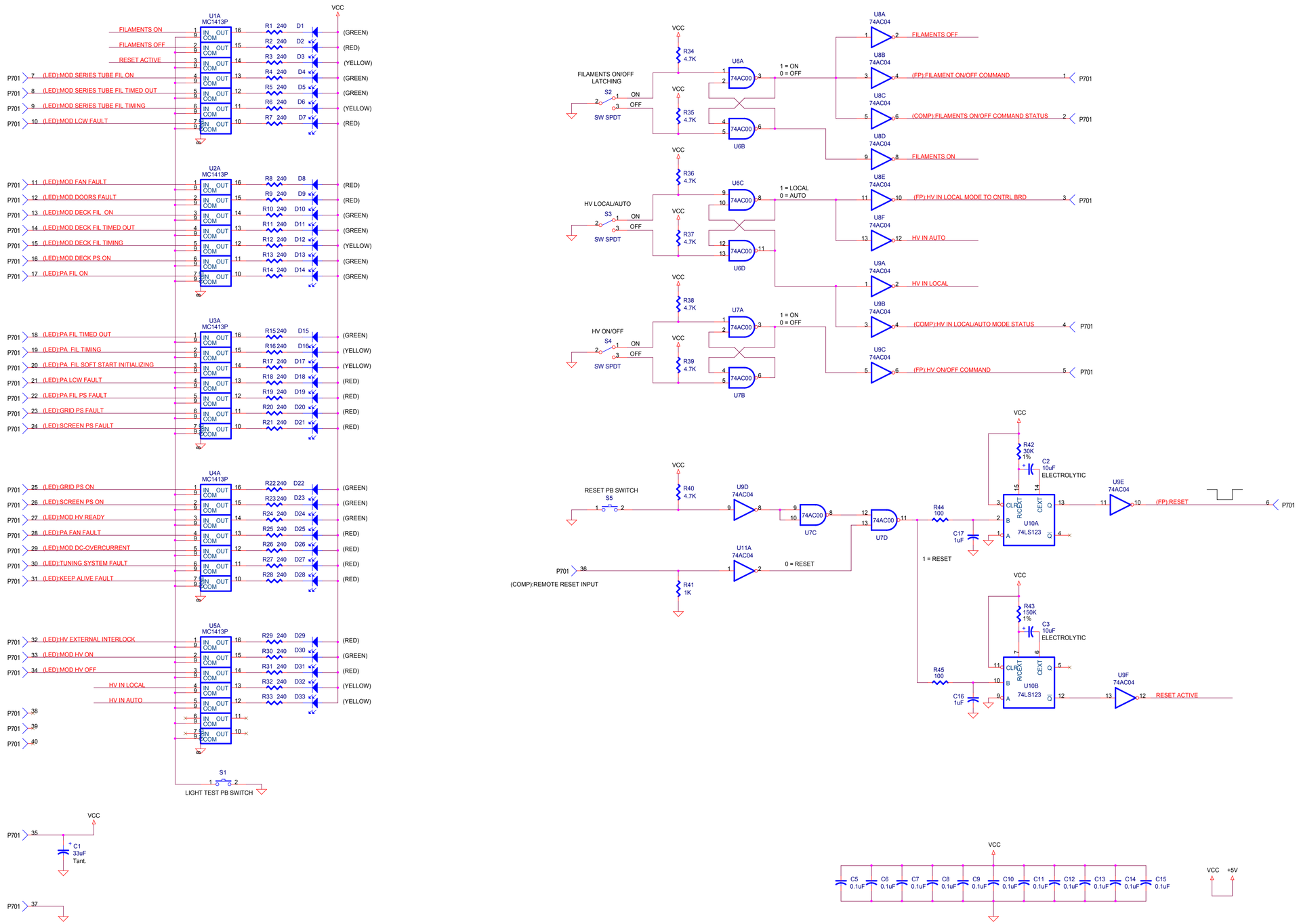

ITEM NO	PART NO	DESCRIPTION OR SIZE	QTY REQ

PARTS LIST

UNLESS OTHERWISE SPECIFIED

FRACTIONS	DECIMALS	ANGLES
+/-	+/-	+/-

1. BREAK ALL SHARP EDGES 1/64" MAX
2. DO NOT SCALE DWG
3. DIMENSIONING IN ACCORD WITH ANSI Y14.5 STD'S

MAX. ALL MACHINED SURFACES

ORIGINATOR	T. Berenc	4/26/00
DRAWN	B. Gorge	4/26/00
CHECKED	Rick Zifko	7/25/01
APPROVED	Tim Berenc	7/25/01
USED ON	9535.020-BD-181826 PRINTED WIRING BOARD	
MATERIAL		

FERMI NATIONAL ACCELERATOR LABORATORY
UNITED STATES DEPARTMENT OF ENERGY

RF SYSTEMS
ANODE MODULATOR CONTROL UNIT
A107 PCB (FRONT PANEL LED DISPLAY)

SCALE	FILMED	DRAWING NUMBER	REV
		9535.020-ED-181807	.

Wednesday, July 25, 2001 — CREATED WITH ORCAD CAPTURE V7.20.170