REV	DESCRIPTION	DRAWN / APPD	DATE / DATE
.	.	.	.
.	.	.	.

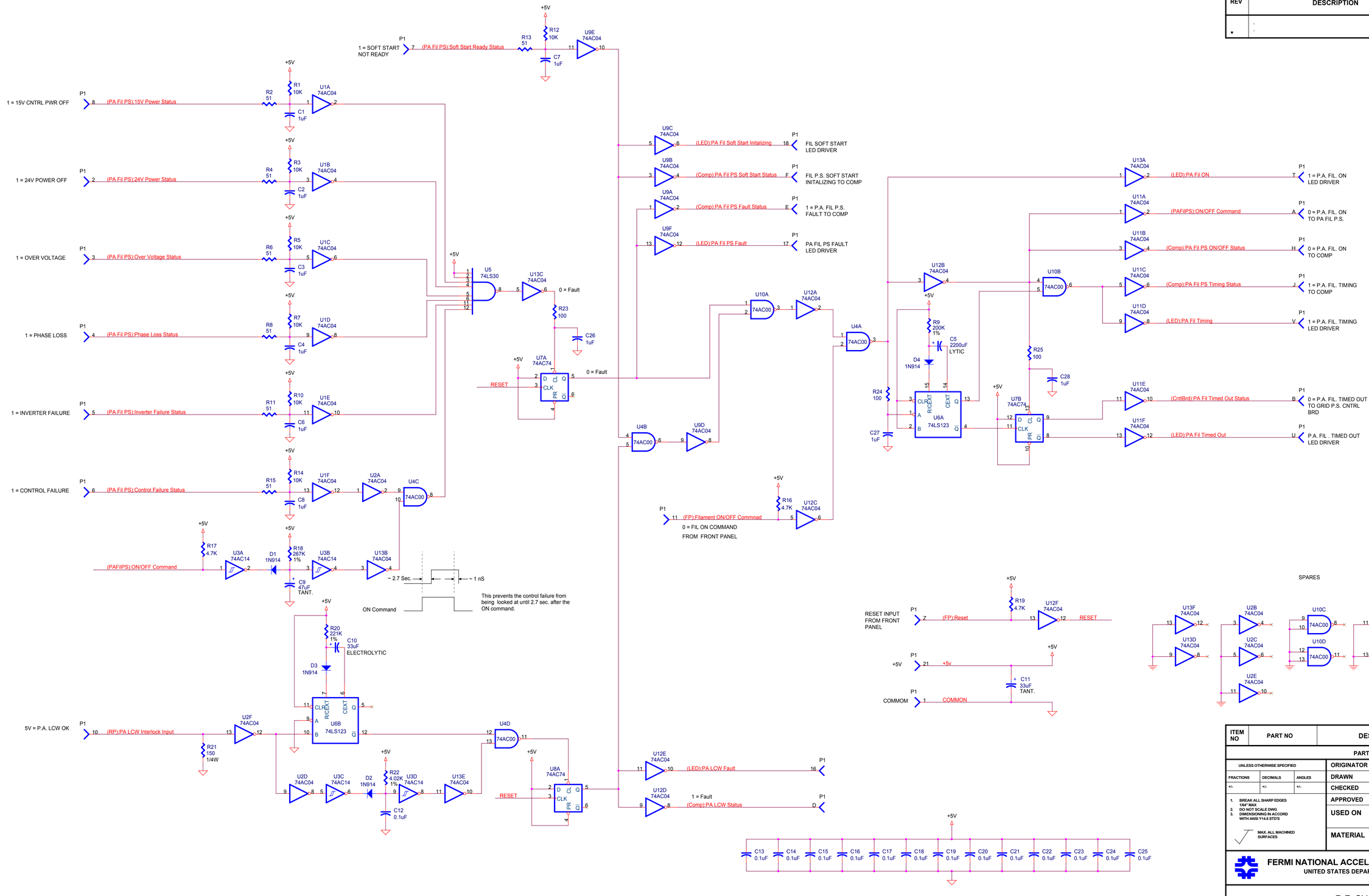

ITEM NO	PART NO	DESCRIPTION OR SIZE	QTY REQ
		PARTS LIST	

UNLESS OTHERWISE SPECIFIED				
FRACTIONS	DECIMALS	ANGLES	ORIGINATOR	T. Berenc	3/17/00
+/-	+/-	+/-	DRAWN	B. Gorge	3/17/00
			CHECKED	Rick Zifko	7/25/01
1. BREAK ALL SHARP EDGES 1/64" MAX			APPROVED	Tim Berenc	7/25/01
2. DO NOT SCALE DWG. 3. DIMENSIONING IN ACCORD WITH ANSI Y14.5 STD'S			USED ON	9535.020-BD-181820 Printed Circuit Board	
MAX. ALL MACHINED SURFACES			MATERIAL		

FERMI NATIONAL ACCELERATOR LABORATORY
UNITED STATES DEPARTMENT OF ENERGY

R.F. SYSTEMS
ANODE MODULATOR CONTROL UNIT
A101 PCB SCHEMATIC (PA Fil PS CONTROL BOARD

SCALE	FILMED	DRAWING NUMBER	REV
		9535.020-ED-181801	.

Wednesday, July 25, 2001 — CREATED WITH ORCAD CAPTURE V7.20.170